4. Front Door Glass

A: REMOVAL

1) Remove the front door trim. <Ref. to EI-41, REMOVAL, Front Door Trim.>
2) Remove the sealing cover. <Ref. to EB-17, REMOVAL, Front Sealing Cover.>
3) Remove the outer mirror assembly. <Ref. to GW-18, REMOVAL, Outer Mirror Assembly.>
4) Remove the mirror gusset.

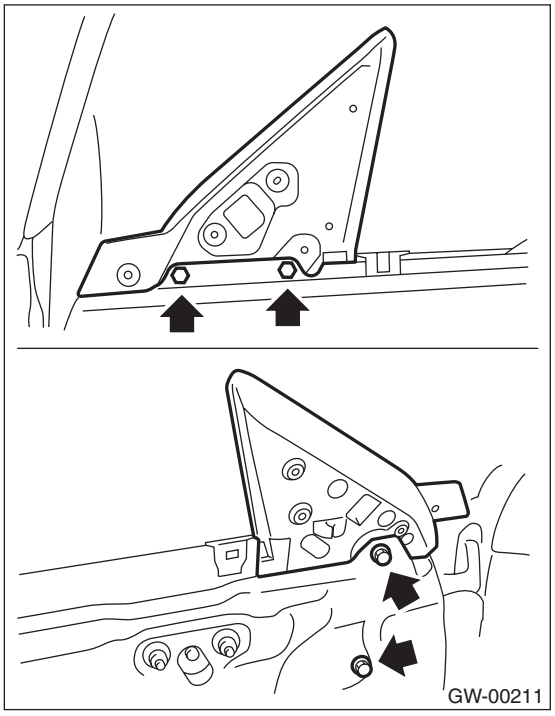

5) Remove the stabilizer (inner) and stabilizer (outer).

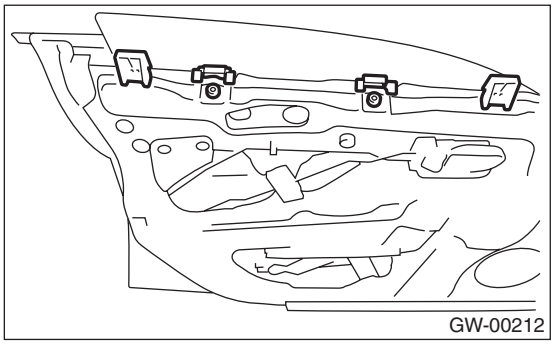

6) Remove the screw from the rear end of the weather strip to remove the weather strip.

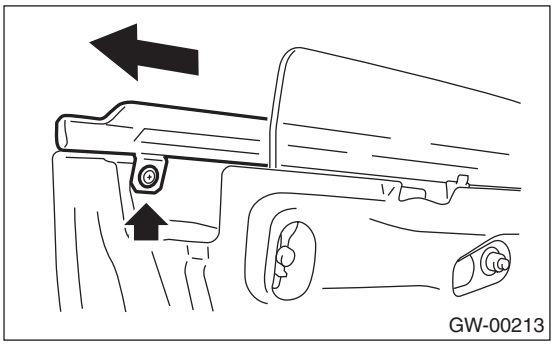

7) Operate the power window switch to move the glass to the position shown in the figure, then remove the two nuts through the service holes.

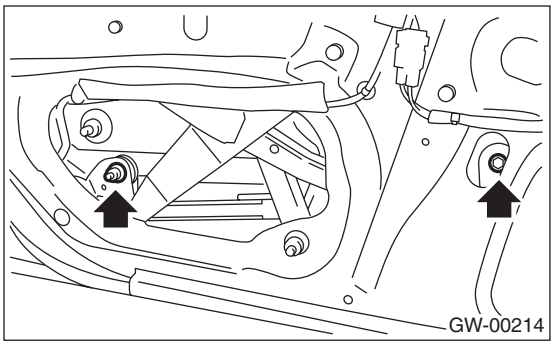

8) Remove the door glass.

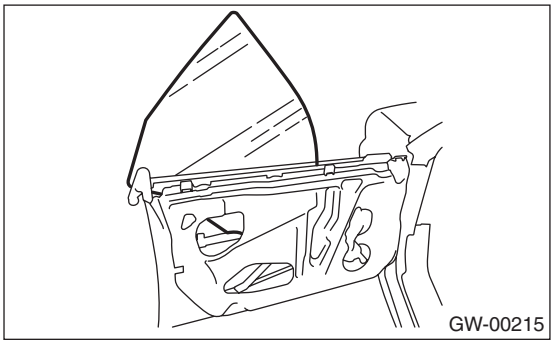

CAUTION:
- **Since the gear may be disengaged, do not turn regulator in the closing direction after removing glass.**
- **Avoid impact and damage to the glass.**

B: INSTALLATION

1) Install in the reverse order of removal.

CAUTION:
Make sure the slider (front) and roller (rear) of glass is placed securely in the front and rear sash.

2) Adjust the front door glass. <Ref. to GW-12, ADJUSTMENT, Front Door Glass.>

Tightening torque:
Refer to "COMPONENT" of "General Description". <Ref. to GW-4, FRONT DOOR GLASS, COMPONENT, General Description.>

C: ADJUSTMENT

NOTE:
Before adjustment, ensure that all adjusting nuts of stabilizer (inner), upper stopper and sash are loose and door glass rises until it makes contact with the weather strip.

1) Temporarily tighten the adjusting bolt on one side of the rear sash, at the midpoint of the slotted hole in the inner panel.

2) Temporarily tighten the regulator B channel at the top position of slotted hole.

3) Lower the door glass 10 — 15 mm (0.39 — 0.59 in) from fully closed position. While applying an outward pressure F of 45.0±5.0 N (4.5±0.5 kgf, 9.9±1.1 lbf) to the upper edge of the glass above the midpoint of the stabilizers (outer), press the stabilizer (inner) to the glass at a pressure of 30±5 N (3.0±0.5 kgf, 6.6±1.1 lbf) to secure it.

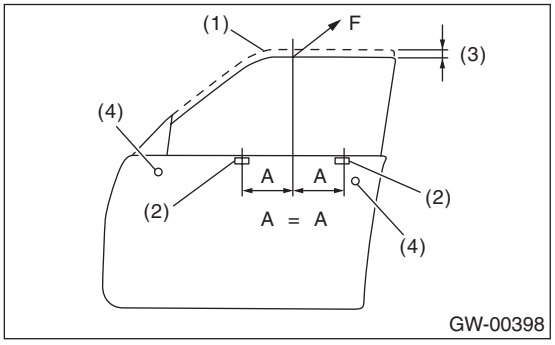

(1) Fully closed position
(2) Stabilizer (outer)
(3) 10 — 15 mm (0.39 — 0.59 in)
(4) Upper stopper

4) To adjust the clearance between front glass and center pillar cover, loosen nuts (A), and move the glass sash back and forth until the clearance becomes the value shown.

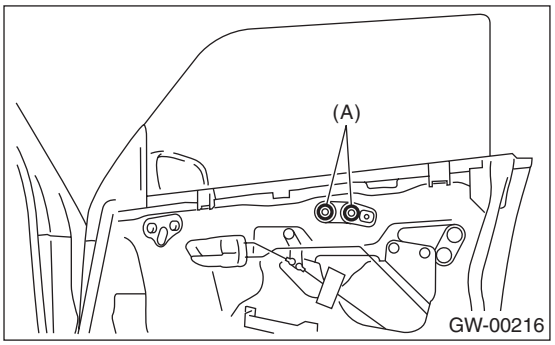

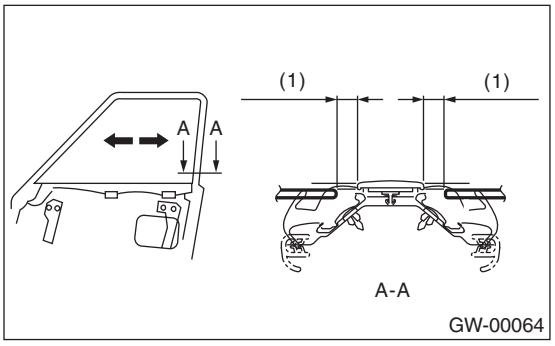

(1) 12 mm (0.472 in)

5) To adjust the upper end and lower end of the center pillar, loosen the adjusting nut (A) of B channel (B).

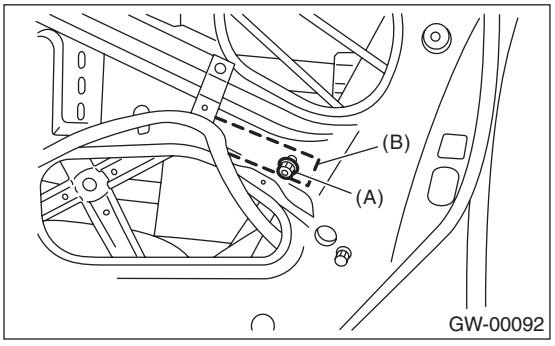

6) Adjust so that the upper and lower ends of the center pillar are the same size.

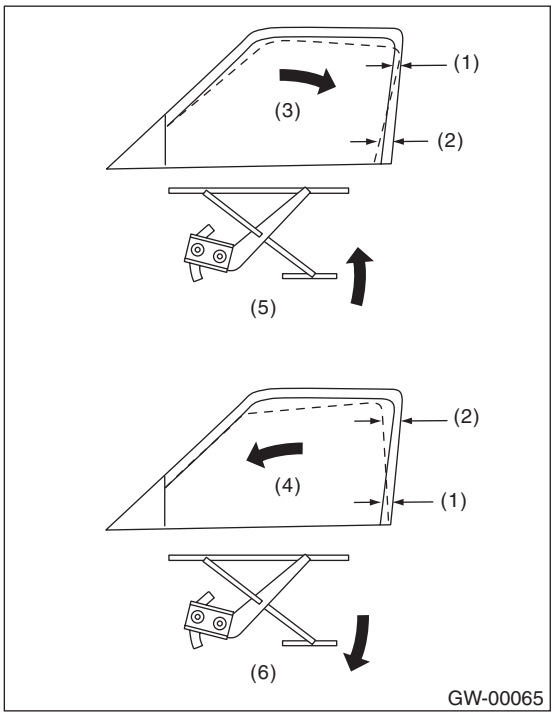

(1) Narrow
(2) Wide
(3) Glass tilts too far rearward
(4) Glass tilts too far forward
(5) Raise B channel
(6) Lower B channel

7) For glass stroke adjustment, attach ST to the glass and close the door, and raise the glass until positional relationship between glass and weather strip becomes as shown. And secure the glass so that the upper stopper lightly touches the glass holder.

ST 61299AE000 SPACER (Glass thickness: 5 mm (0.197 in) for front door glass)

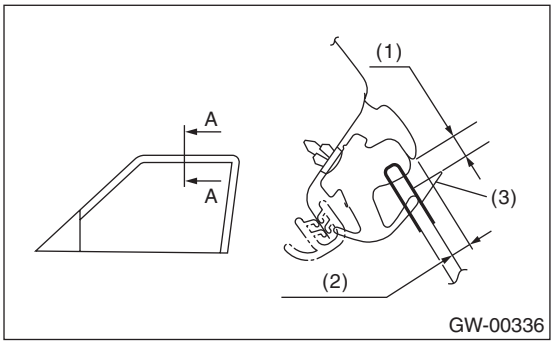

(1) 2.7 — 4.3 mm (0.106 — 0.169 in)
(2) 6 mm (0.236 in)
(3) ST

For preventing wind noise, adjust the glass at the position where tip of gusset is raised up a little.

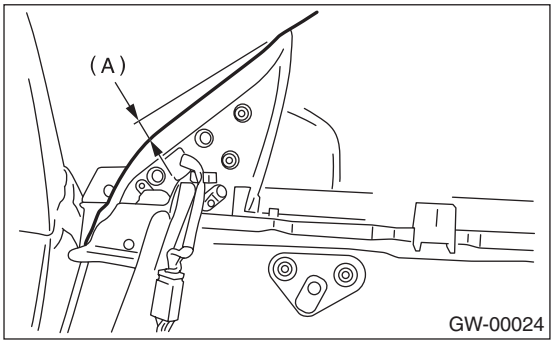

(A) 0 — 1.5 mm (0 — 0.059 in)

8) After stabilizer adjustment, carry out glass cohesion adjustment. First, visually ensure the positional relationship between the retainer & molding and the glass of the roof side, then start the rear sash adjustment. Attach the ST to the glass and adjust two adjusting bolts alternately step by step, to obtain dimensions shown below (cross-section A).

ST 61299AE000 SPACER (Glass thickness: 5 mm (0.197 in) for front door glass)

NOTE:
If two nuts are loosened at the same time, the sash moves back and forth. Therefore, when one nut is adjusted, leave the other secured.

9) Make the same adjustment of two adjusting bolts of rear sash.

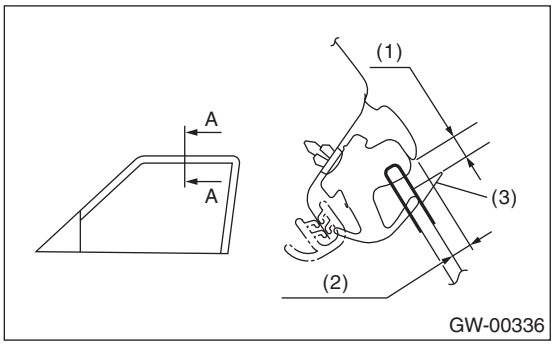

(1) 2.7 — 4.3 mm (0.106 — 0.169 in)
(2) 6 mm (0.236 in)
(3) ST

NOTE:
Do not tilt the sash bracket to inner panel during adjustment. If tilting, the regulator does not operate smoothly.

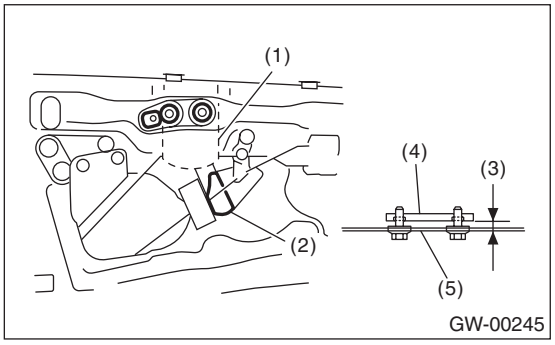

(1) Sash bracket
(2) Rear sash
(3) Adjust the lines parallel
(4) Sash
(5) Inner panel

10) Make adjustment of front sash in the same manner as that of rear sash.

NOTE:
Although front and rear sashes must, as a rule, be adjusted in the same manner, in some door installation, the adjustment in a different manner may be required. However, adjustment of one sash to the maximum amount and the other to the minimum amount is not permitted. Such adjustment may result in applying excessive load against regulator.

11) After adjustments, tighten the nuts.

12) After adjustment of the glass, close the door. If there is a gap between outer lip of gusset and glass surface, adjust the gap by adjusting bolt (A) at the attachment hardware at the lower side of the gusset to prevent generation of wind noise.

13) During adjustment, loosen the other three clamping bolts.

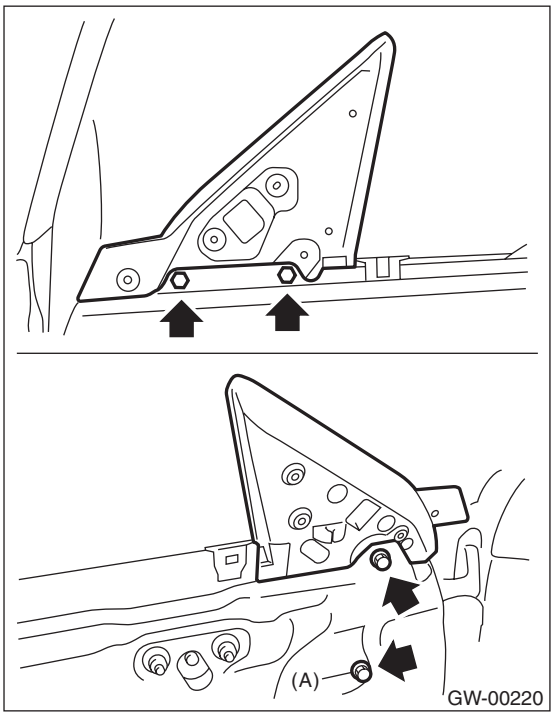

14) After adjustment, tighten the bolts and nuts.